ICE AIR
World Class Comfort™
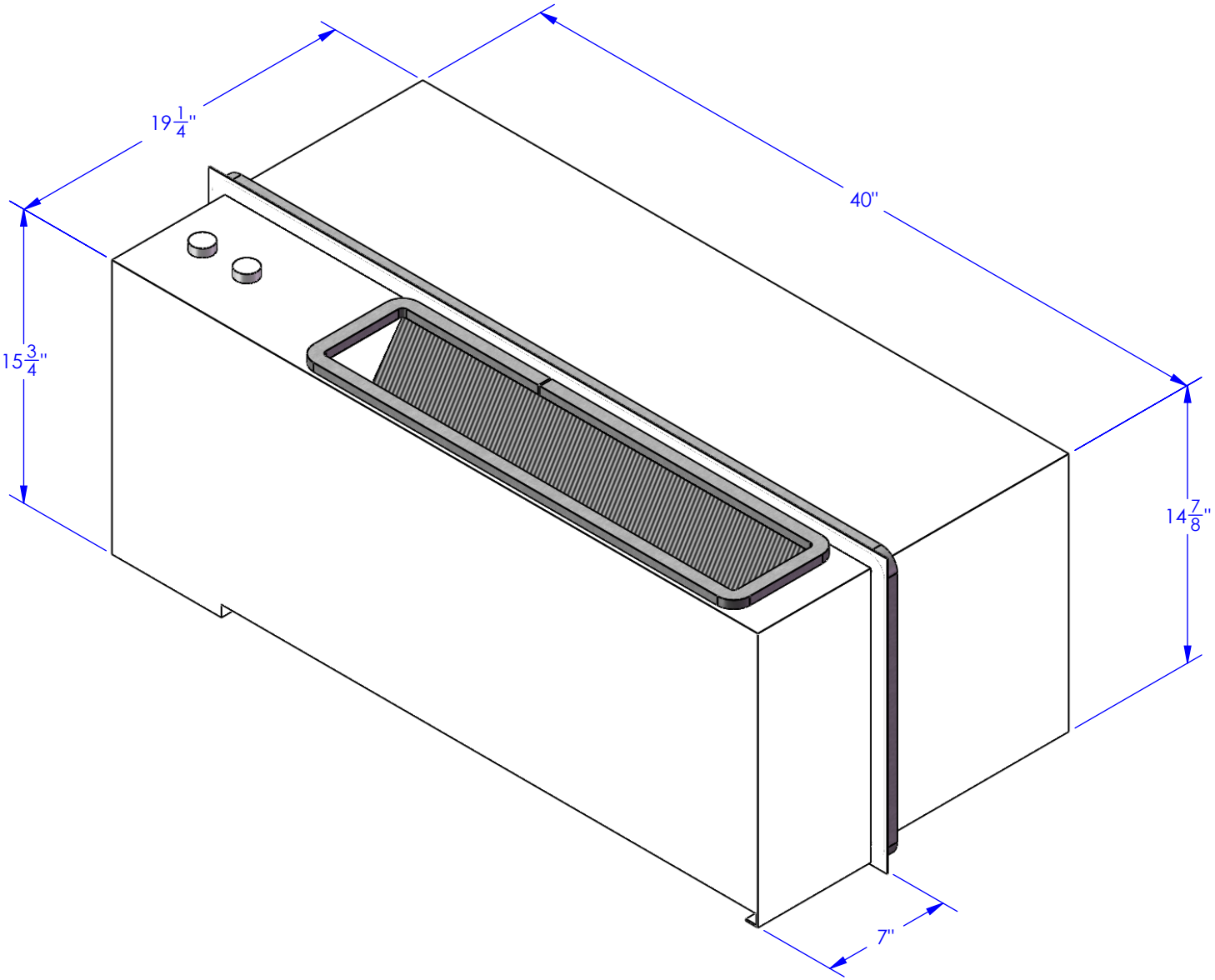
RSCT-ZS